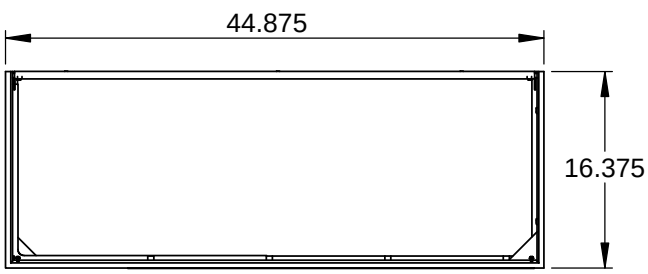

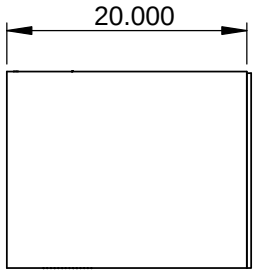

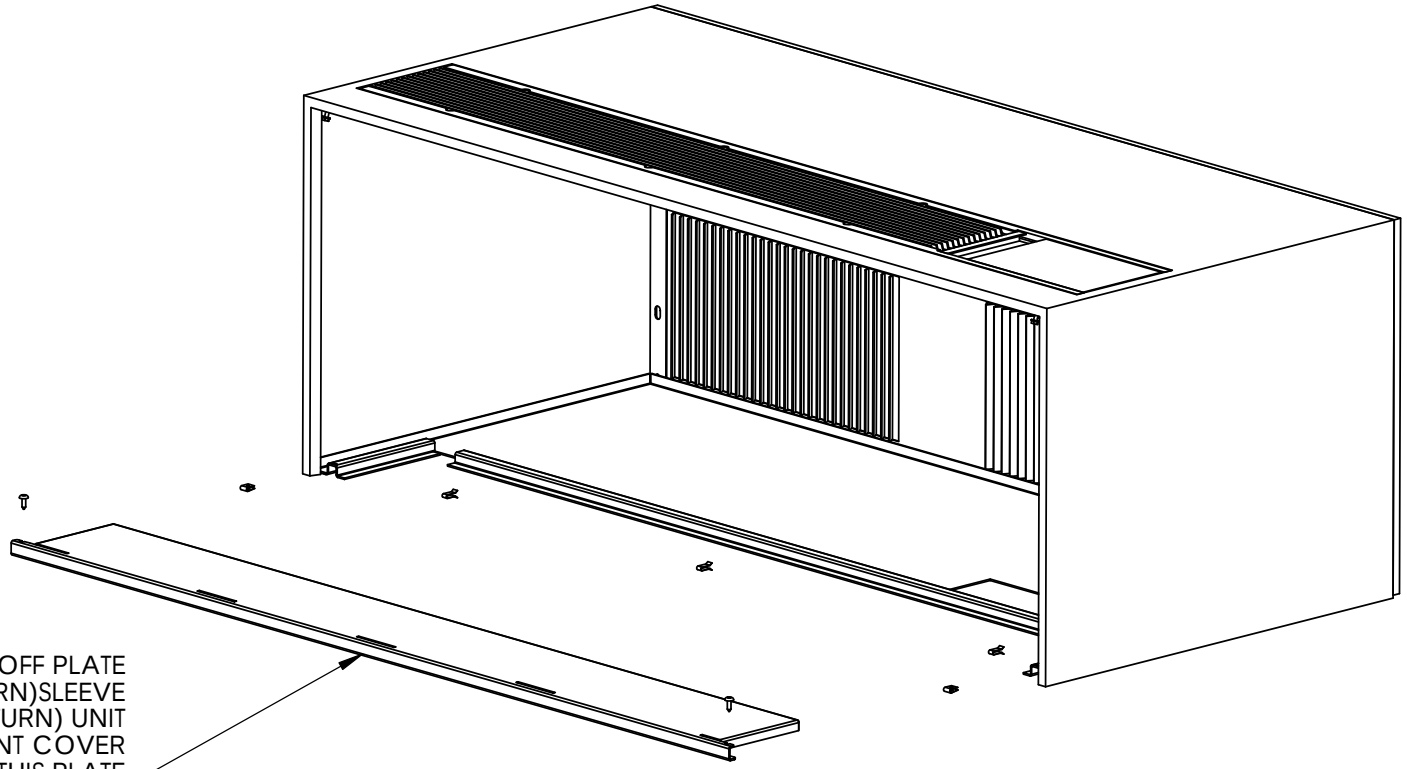

BLANK OFF PLATE
INSTALL IN RS (BOTTOM RETURN)SLEEVE
TO CONVERT TO EA (FRONT RETURN) UNIT
** MUST USE FRONT RETURN FRONT COVER
WITH FILTER IN CONJUNCTION WITH THIS PLATE

REV	DATE	NOTES	BY

APPLICATION

	NAME	DATE
DRAWN	WWebber	
CHECKED		
ENG APPR.		
MFG APPR.		
Q.A.		
MATERIAL		
FINISH		

DO NOT SCALE DRAWING

COMMENTS:

Applied Comfort

TITLE:
RS TO EA SLEEVE RETROFIT KIT

SIZE	DWG. NO.	REV
G	ea sleeve assembly	00

SCALE: 1:8 | WEIGHT: | SHEET 1 OF 1

PROPRIETARY AND CONFIDENTIAL

THE INFORMATION CONTAINED IN THIS DRAWING IS THE SOLE PROPERTY OF <INSERT COMPANY NAME HERE>. ANY REPRODUCTION IN PART OR AS A WHOLE WITHOUT THE WRITTEN PERMISSION OF <INSERT COMPANY NAME HERE> IS PROHIBITED.

5 4 3 2 1